M A N U A L & I N S T R U C T I O N S

Westbo Victoria

westbo of sweden

How to use

Air Controls

Westbo Victoria is equipped with one air control and it sits under the stove, see picture on right.

Fire up

We recommend you to use fire starters or equivalent that you find at your dealer.

By using them, you get a quick lit up of your wood and cleaner combustion.

Never use lighter fluid. Place some thin wood together with a couple of fire starters in the burning chamber open the primary air control, it sits under the stove

Now lit up

Keep the door a little open, after a while when burning well you can close the door

Continuous firing

Operate the fire with the air control

The conditions for controlling combustion vary depending on the temperature in the burning chamber and the draught in the chimney. This you will understand more after using the stove a couple of times.

A recommended amount of wood per hour is 1.5 to 3 kg.

Smell

At the first firing, a certain smell might occur. This depends on the coating. The smell disappears after a few fires.

Emptying the ashes

The ashtray accessed by opening the door (D)

Open the grate by pulling the grate lever rake down the ashes Empty the ash tray in a safe place. NOTE! The ash can contain embers several days after the fire.

Cleaning glass

There are special glass cleaners available at your dealer. Do not use abrasive cleaners.

Chimney fire

In case of chimney fire, all doors and air controls shall be closed

If necessary contact the authorities.

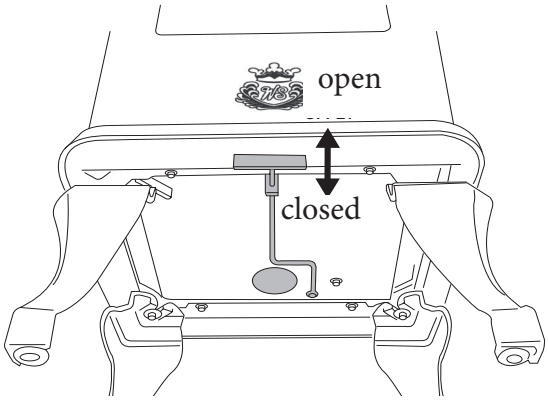

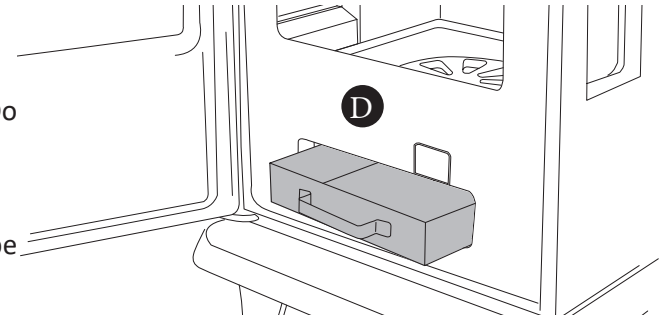

Preparation of the stove

Cut away the plastic strap that holds the carton in place over the stove.

Lift the carton and check that the stove is not damaged. Lift the stove in place.

Under the stove you find the crown.

Do not put on the Crown on until the stove have been installed.

Victoria has adjustable feet so you can adjust the stove to the right level, if the floor is not flat.

Victoria is standard connected to the rear. If you like to connect upwards you need to buy additional adapter that goes from the rear to up. See picture

Connection to an existing chimney.

Before you start it is important that you let the chimney sweeper inspect your chimney.
This because you must be sure it is tight and properly dimensioned for the stove.
Make your connection in the following order:
1. Measure out the centre of the hole
2. Use suitable tools to make the hole
3. We recommend that you use a flue spigot
4. Insert the flue pipe into the spigot then connect with the stove seal between the spigot and flue pipe(preferably seal rope) The pipe should not go into the actual
Chimney, cut if necessary. Apply additional sealant for other joints.
5. Important! If your connection kit includes a rosette collar to cover the hole in to the chimney put it on before connecting the stove.
6. Contact chimney sweep for an inspection.

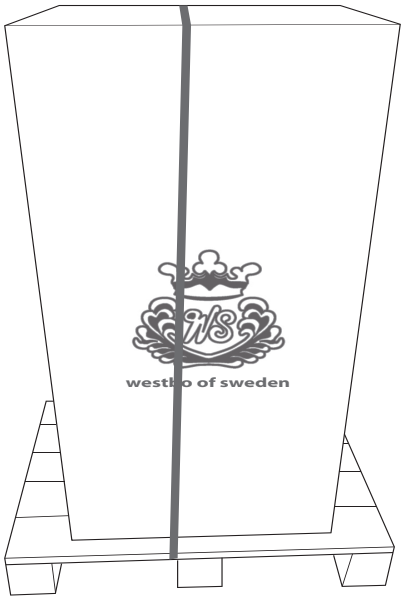

Adjustable feet

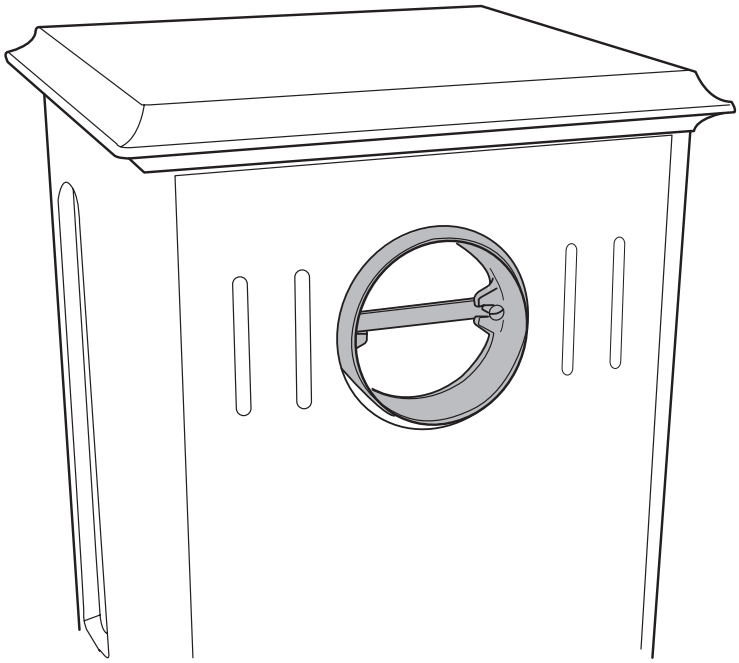

Replace the glass windows if broken

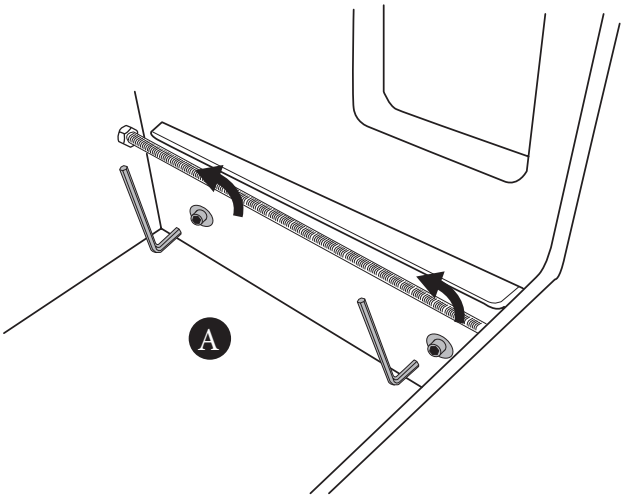

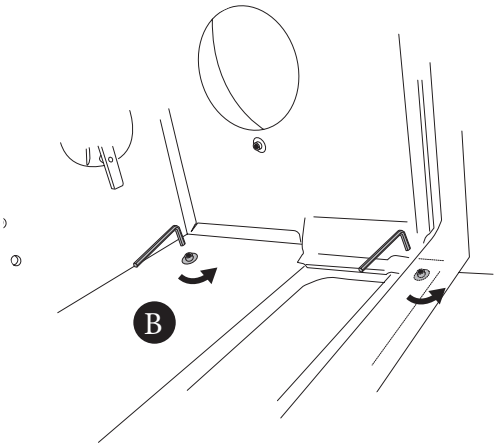

Replacing side glass

1. Start by taking out firebricks according to the instructions on the next page.

2. Then remove grate bottom. The handle of the rust is assembled with a nut that you access through the opening for the ash tray.

3. Remove the four screws that hold the side in place according to the picture A and B.

4. Remove the clips that holds the glass in place (C).

5. Install the new glass and make sure that it seals tightly against sealing rope. Replace if necessary.

6. Install the parts in reverse order.

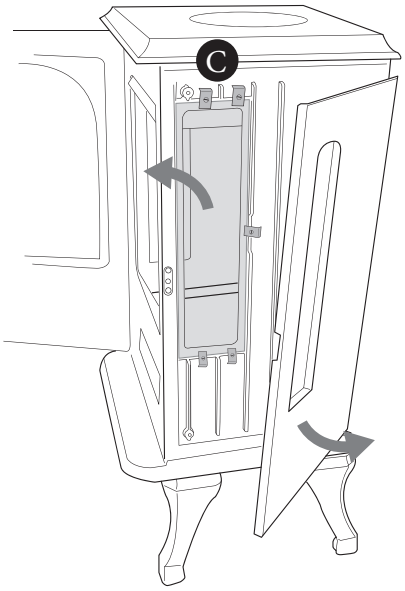

Replacing the front glass

Remove clips that hold the glass in place and then install the new glass

Sealing string. Replace if necessary

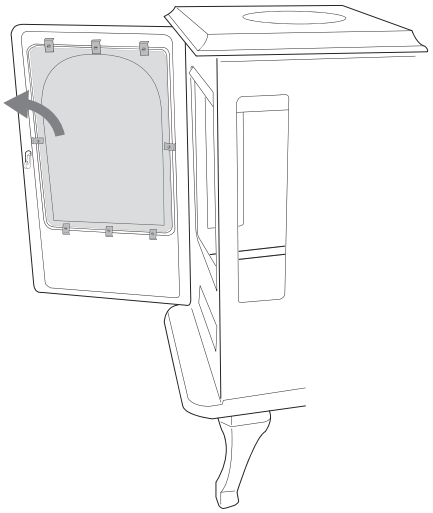

Victoria

Disassembe/assembe the firebricks

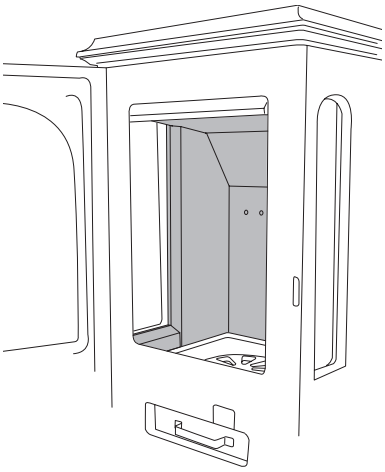

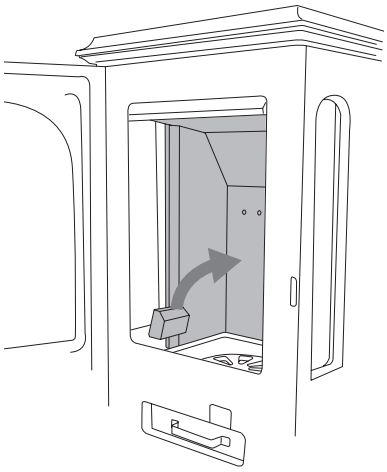

1. Start with the small side-brick

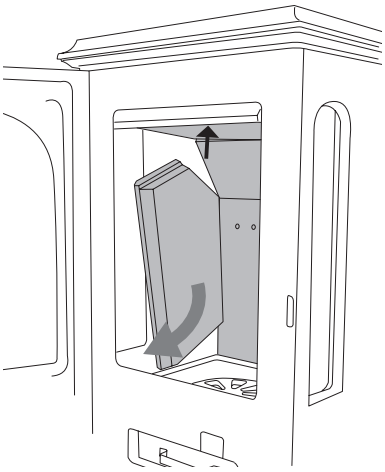

2. Then remove the big side-brick by first lift the roof brick that lock the big-side brick

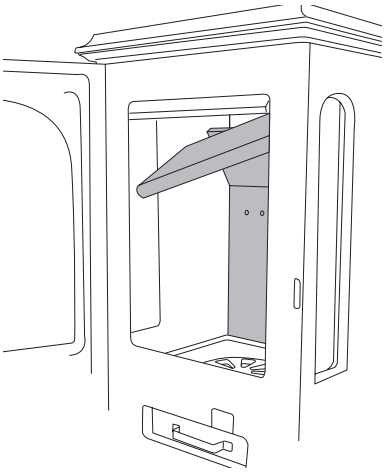

3. Take down the roof-brick

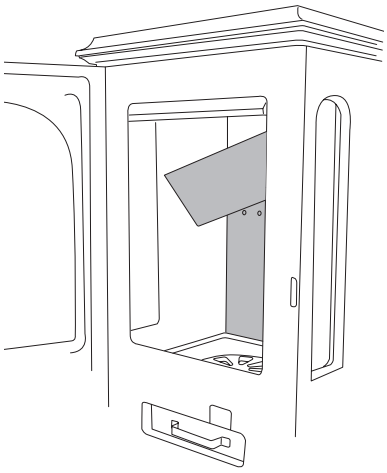

4. After that take out the angle-brick Now it´s easy to remove the rest of the bricks.

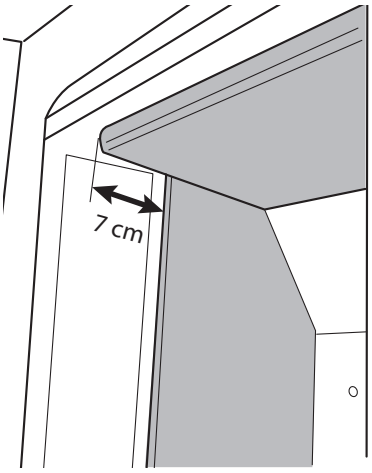

5. To assemble again just do it in reverse order

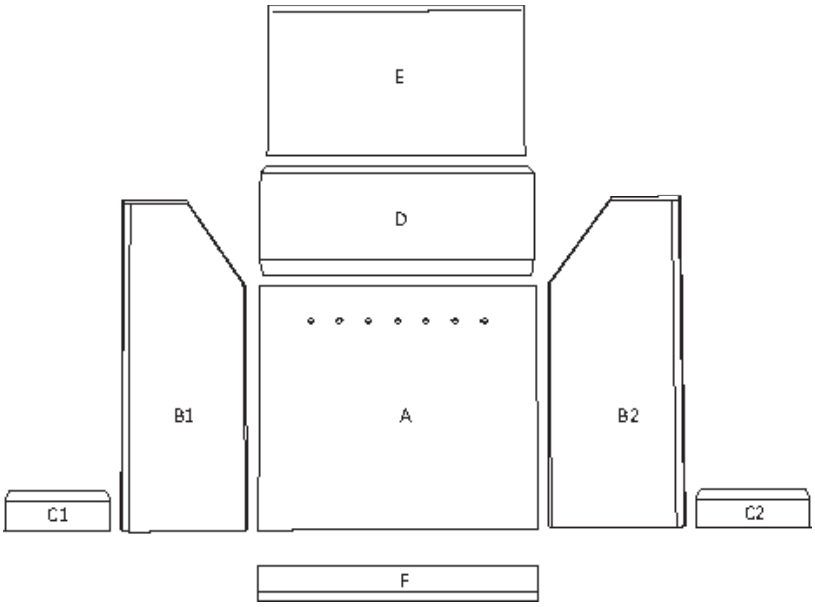

A - Back-brick
B1 - Left big side-brick
B2 - Right big side-brick
C1 - Left small side-brick
C2 - Right small side-brick
D - Angle-brick
E - Roof-brick
F - Front-brick

Tecnical data

Weight:	170 kg
Material:	Cast-iron
Output:	6 kW
Efficiency:	82 %
Distance to combastable wall behind:	120 mm
Distance to combatable side wall	450mm without side window/ 630mm with side window
CE tested:	According to EN 13240

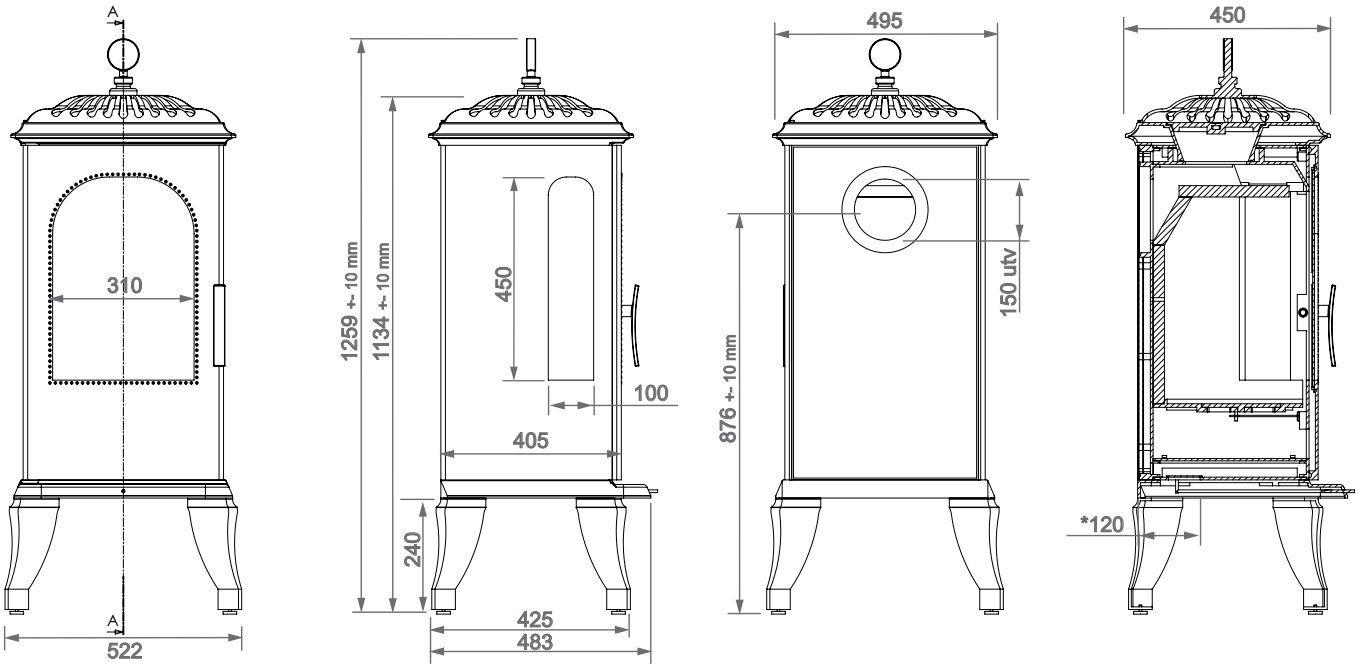

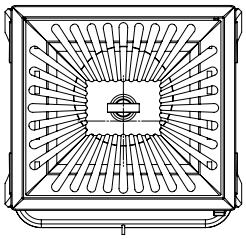

Distance to combastible

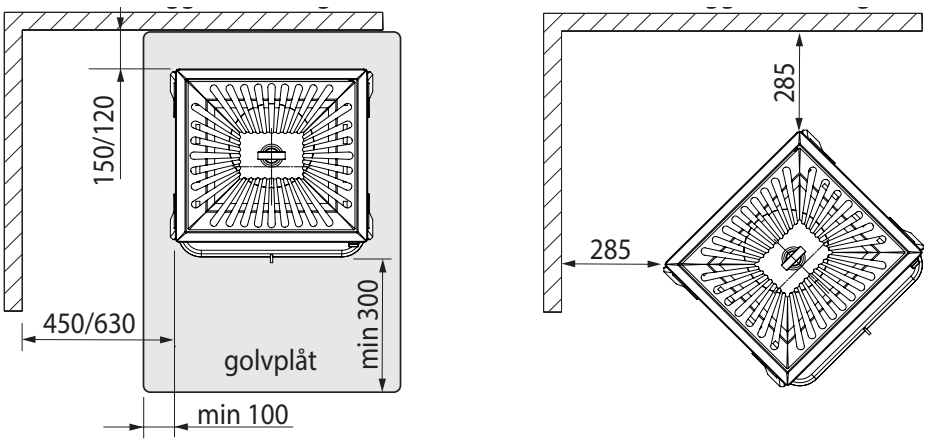

CPR – Beilage III
Leistungserklärung gemäß Verordnung (EU) 305/2011
Declaration of performance according to Regulation (EU) 305/2011

Nr. - No. VICTORIA 125 CPR150708

1. Eindeutiger Kenncode des Produkttyps/*Unique identification code of the producttype*:
Westbo Victoria 125
Raumheizer für feste Brennstoffe ohne Warmwasserbereitung/*roomheater fired by solid fuel without water heating supply* EN 13240:2001/A2:2005/AC:2007

2. Verwendungszweck/*Intended use*:
Raumheizung in Gebäuden mit möglicher Heiz- u. Brauchwasserbereitung/*Space heating in residential buildings with possible supply of hot water*

3. Hersteller/*Trade mark*:
Westbo i Reftele AB, Industrigatan 8, 33021 Reftele, Sweden, Tel. +46 371 23330, www.westbo-of-sweden.com

4. Bevollmächtigter/*Authorised*:
Mattias Gunnarsson, mg@westbo-of-sweden.com, Box 5, 33021 Reftele, Sweden Tel. +46 371 23332

5. System(e) zur Bewerbung und Überprüfung der Leistungsbeständigkeit des Bauproduktes/*System(s) of assessment and verification of constancy of performance:*
System 3

6. Das notifizierte Prüflabor hat nach System 3 die Erstprüfung durchgeführt.
***The notified laboratory performed of the product type on the basis of type testing under system 3*:**
Benannte Stelle/Notified body: Nr/No: 1625 Rhein – Ruhr Feuerstätten Prüfstelle Oberhausen
Prüfberichtsnummer: Rapport nr: RRF - 4015 4024, Prüfdatum/*Date of testing: 08.07.2015*

7. Erklärte Leistung/*Declared performance*:
Erklärte Leistung gilt für/*declared performance presents for*: Westbo Victoria 125: EN 13240:2001/A2:2005/AC:2007

wesentliche Merkmale/essential charakteristics	Leistung/performance
Brandsicherheit/*Fire safety* Brandverhalten/*Reaction to fire*	erfüllt - pass A1
Abstand zu brennbaren Materialien/*Safety distance to combustible material*	Mindestabstand/*Minimum distance* hinten /*rear* = 120 mm mit Seitenscheiben/with side glas Seite /*sides* = 630 mm ohne Seitenscheiben/ without sideglas = 450 mm vorne /*front* = 800 mm Boden /*floor* = 0 mm
Brandgefahr durch Herausfallen von brennendem Brennstoff/*Risk of burning fuel falling*	erfüllt/*pass*
Reinigbarkeit/*Cleanability*	erfüllt/*pass*
Emission aus Verbrennungsprodukten/*Emission of combustion products* bei Scheitholz /*log of wood*	 CO 0,08%
Oberflächentemperatur/*Surface temperature* Elektrische Sicherheit/*Electrical safety* Freisetzung von gefährlichen Stoffen/*Release of dangerous substance* Maximaler Betriebsdruck/*max operation pressure*	erfüllt/*pass* nicht zutreffend/*not applicable* keine Leistung festgestellt/*NPD* nicht zutreffend/*not applicable*
Abgastemperatur am Stutzen bei Nennwärmeleistung/*Flue gas outlet temperature at nominal heat output* Mechanische Festigkeit (zum Tragen eines Schornsteins)/*Mechanical resistance (to carry a chimney flue)* Wärmeleistung/*Thermal output*	316° Celsius (bei Scheitholz/*log of wood*) Keine Leistung festgestellt, ungetestet/*NPD* erfüllt/*pass*
Nennwärmeleistung/*Nominal heating output* Raumwärmeleistung/*Room heating output* Wasserwärmeleistung/*Water heating output*	6,7 kW 6,7 kW nicht zutreffend/*not applicable*
Wirkungsgrad/*Efficiency* Zusätzliche Information/*Additional information*: Staub/*Particles*	82,0 % 17 mg/Nm³

8. Die Leistung des vorstehenden Produktes entspricht der erklärten Leistung nach Nummer 7.
The performance of the product is in conformity with the declarad performance in point 7.
Verantwortlich für der Erstellung dieser Leistungserklärung ist allein der Hersteller gemäss Nummer.
The declaration of performance is issued under the sole responsibility of the manufacturer identified in point 3.
Die Ausführung der Leistungserklärung ist mit den technischen Komitees in der EU abgestimmt.
The design of this declaration of performance is in accordance with the technical committees.

Unterzeichnet im Namen des Herstellers */ Signed on behalf of the manufacturer:*

Mattias Gunnarsson
Geschäftsleitung/*CEO*
Westbo i Reftele AB
Reftele 2017-07-01

CE

westbo of sweden

Warranty

Westbo of Sweden has a 10 year stove casting warranty and a 1 year warranty concerning natural wear and tear of articles of consumption such as firebricks, vermiculite, grates, glass, handles and rope seal.

The warranty is only valid if the stove has been used in a proper way according to the instructions and will not be valid if any extreme or careless handling has occurred like overheating, wrong fuel or too much wood etc.

Westbo of Sweden is obligated to provide new parts/stove if any defects covered by the warranty occurred, but takes no responsibility for removal or installation costs for the exchange.

The warranty covers only the product and the buyer is not entitled to compensation for any personal or property damage.

Yours sincerely

Mattias Gunnarsson

Managing director